REVISION RECORD			
LTR	DESCRIPTION	DATE	BY
A	ECO: #13621	9-28-93	KA
B	ITEM 2 WAS 2 1/2" THREAD LENGTH	10-26-94	14169 C.H.
C	ITEM 1 WAS 6007-0353 HEX HEAD BOLT, ITEM 2 WAS 6007-0351 HEX HEAD BOLT	6/5/97	15666 RN

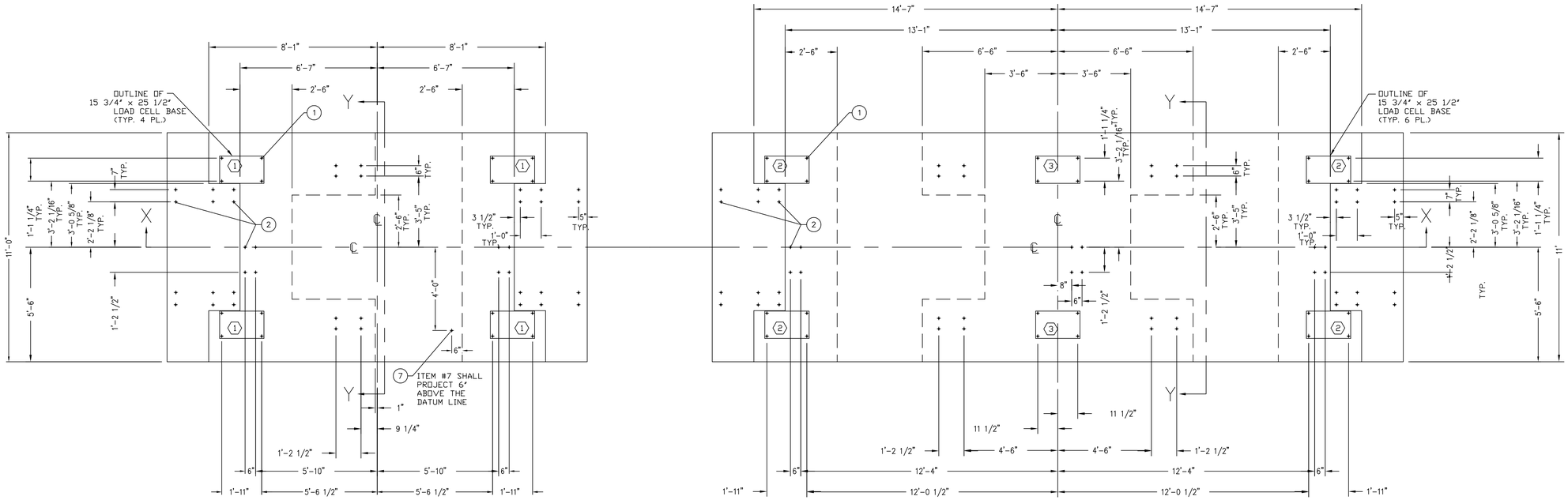

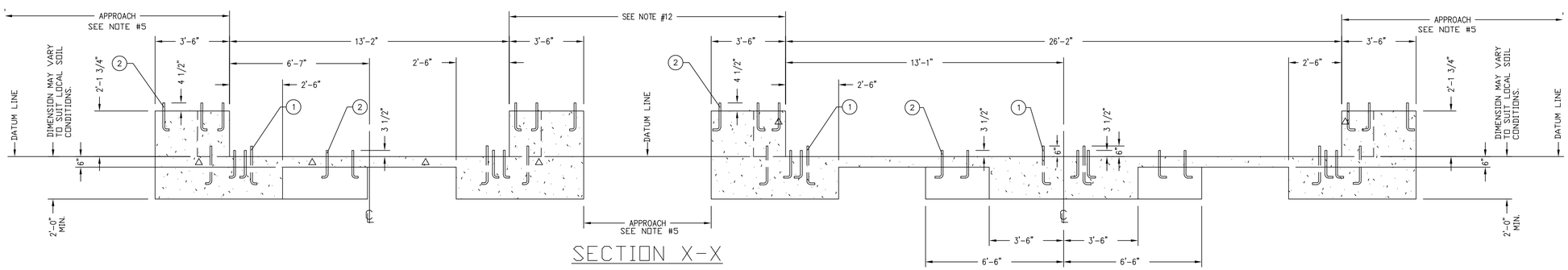

SECTION X-X

PIER LOADINGS AT COOPER E-80 LOAD RATING	
PIER	LOADING
1	102 KIP
2	101 KIP
3	104 KIP

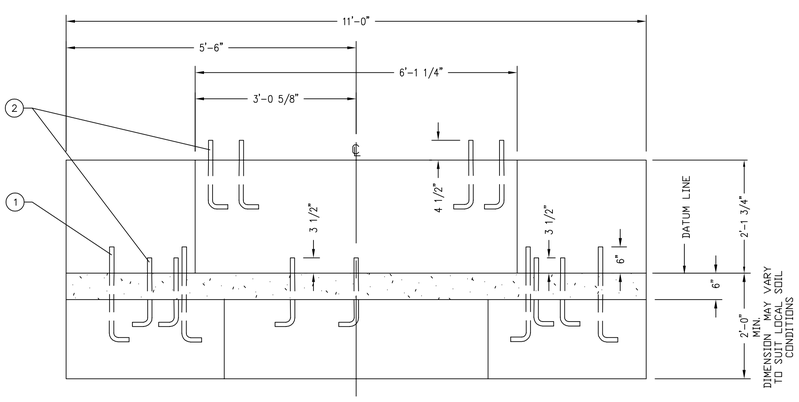

SECTION Y-Y

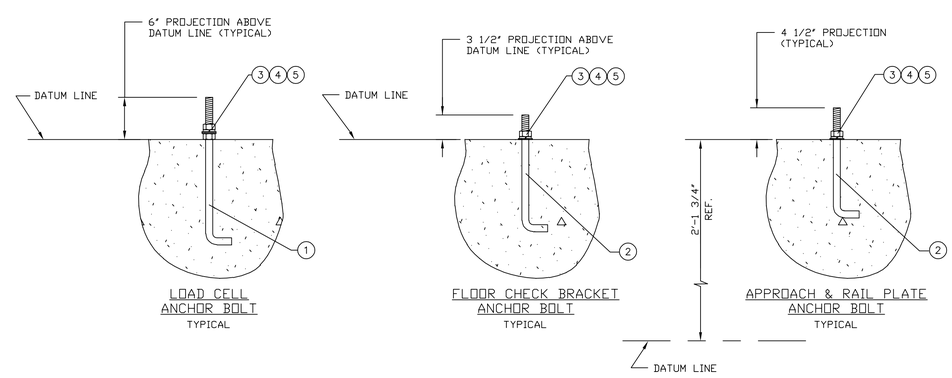

LOAD CELL ANCHOR BOLT
TYPICAL

FLOOR CHECK BRACKET ANCHOR BOLT
TYPICAL

APPROACH & RAIL PLATE ANCHOR BOLT
TYPICAL

NOTES:

1. THE MINIMUM SOIL BEARING SHALL BE 4,000 POUNDS PER SQUARE FOOT. THE MINIMUM CONCRETE STRENGTH SHALL BE 3,000 POUNDS PER SQUARE INCH, 28 DAY . FOR UNUSUAL SOIL CONDITIONS OR DEEP FROST PENETRATION, ALTER FOUNDATION AS REQUIRED. FOOTINGS MUST BE 12 INCHES BELOW FROST LINE.
2. THE SCALE FOUNDATION SHALL BE CONSTRUCTED OF REINFORCED CONCRETE. THE QUALITY OF MATERIALS AND METHODS OF MIXING AND PLACING THE CONCRETE SHALL CONFORM TO THE A.R.E.A. SPECIFICATIONS FOR REINFORCED CONCRETE PART I CHAPTER 8. THE CUSTOMER SHALL CONSTRUCT THE FOUNDATION TO SUIT LOCAL SOIL CONDITIONS.
3. CARDINAL SCALE MFG. CO. SHALL NOT BE RESPONSIBLE FOR THE STABILITY OF THE FOUNDATION.
4. WORK FROM CENTERLINES WHEN ERECTING FORMS AND SETTING BOLTS. TOPS OF PIERS AND WALLS MUST BE SMOOTH, LEVEL, AND TRUE TO PLANE.
5. SEE DRAWING 0860-D007 FOR RECOMMENDED APPROACHES.
6. TWO INCHES HAS BEEN ALLOWED IN HEIGHT ABOVE THE DATUM LINE FOR GROUTING. STANDARD MILL TOLERANCE STEEL DIMENSIONS ARE NOMINAL AND MAY VARY.
7. APPROX. 91 CU. YDS. EXCAVATION REQUIRED FOR THE FOUNDATION AS SHOWN.
8. APPROX. 43.9 CU. YDS. CONCRETE REQUIRED FOR THE FOUNDATION AS SHOWN.
9. TRANSMISSION CABLE FROM LOAD CELL TO INDICATOR MUST BE IN ONE INCH MINIMUM SIZE STEEL CONDUIT AT LEAST 24 INCHES FROM THE CLOSEST ELECTRICAL LINE. THEY MAY CROSS AT 90° ONLY. (LOCATION OPTIONAL)
10. DO NOT WELD ON THE STRUCTURE WHILE THE ELECTRONIC LOAD CELLS ARE IN THE SYSTEM.
11. SEE DRAWING 3502-C138-ES FOR ELECTRICAL GROUNDING INSTRUCTIONS.
12. CUSTOMER TO SPECIFY DISTANCE BETWEEN SCALES.

QTY.	QTY.	QTY.	ITEM	PART/DWG. NUMBER	DESCRIPTION	MATERIAL OR SOURCE	WT. EACH
			7	3502-B011-53	GROUNDING KIT		43.1
			6				
		172	5	6024-0027	FLAT WASHER	1"	0.19
		132	4	6024-0060	LOCK WASHER	1"	0.08
		172	3	6013-0165	HEX NUT	1"-8 UNC-2B	0.29
		92	2	0849-B091-08	ANCHOR BOLT	1"-8 UNC-2A X 15" 4 1/2" THREAD LENGTH	3.69
		40	1	0849-B092-08	ANCHOR BOLT	1"-8 UNC-2A X 21" 6" THREAD LENGTH	5.02
		676.5	WT.	PARTS/MATERIAL LIST			

UNLESS OTHERWISE SPECIFIED
TOLERANCE ON DIMENSIONS ARE:
ANGLES ± 1/2°
INTEGERS/FRACTIONS ± 1/16 IN.
DECIMALS (.X) ± .03 IN.
DECIMALS (.XX) ± .01 IN.
DECIMALS (.XXX) ± .005 IN.
NOTE: WHOLE NUMBERS MUST BE WRITTEN XX.000 TO INVOKE DECIMAL TOLERANCES.

THIS DRAWING IS THE PROPERTY OF THE CARDINAL SCALE MFG. CO. AND SHALL NOT BE USED NOR REPRODUCED EITHER WHOLLY OR IN PART EXCEPT WITH WRITTEN AUTHORIZATION. ALL RIGHTS OF DESIGN OR INVENTION ARE RESERVED.

Cardinal
Cardinal Scale Manufacturing Co.
WEBB CITY, MISSOURI USA 64870

CARDINAL
DETECTO
FULLER WEIGHING SYSTEMS

TITLE FOUNDATION PLAN: E-80 FULL ELECTRONIC LOW PROFILE RAILWAY TRACK SCALE 13' & 26' LONG A.R.E.A.

SCALE 3/8" = 1'	DO NOT SCALE DRAWING	NEXT ASSEMBLY	0862-D010-0A
DR. C WALLS JR.	DATE 1 APRIL 86		
CH. -	DATE -		
MODEL 1326-80 LPRA-100	SHEET 1 OF 1	DWG. NO. 0862-D009-0A	REV. C

Generated by Cardinal/Detecto Computer-Aided Drafting System