IMPORTANT! If your scale is equipped with access ways, such as manholes, it is the users responsibility to provide proper protection such as barriers, during the time they are open or removed.

REVISION RECORD			
LTR	DESCRIPTION	DATE	BY
C	REDESIGN TO INCLUDE 5/16" DECK PLATE; ACCESS PLATES THRU DECK; NEW J-BOX NOTE 8 WAS 7 1/4" MIN CLEARANCE REVISE NOTE 11	12/30/99	20438 JAT/MLS
D	ITEM 8 QUANTITY WAS 8 ADD ITEM 11	11/10/00	21175 JAT/MLS
E	UPDATED ACCESS PLATES ITEM 3 WAS 0103-C127-0A UPDATED DETAILS TO CURRENT STANDARDS NOTE 3 MAX. LIFT WAS 7,000	8/21/01	21420 GC/JAT

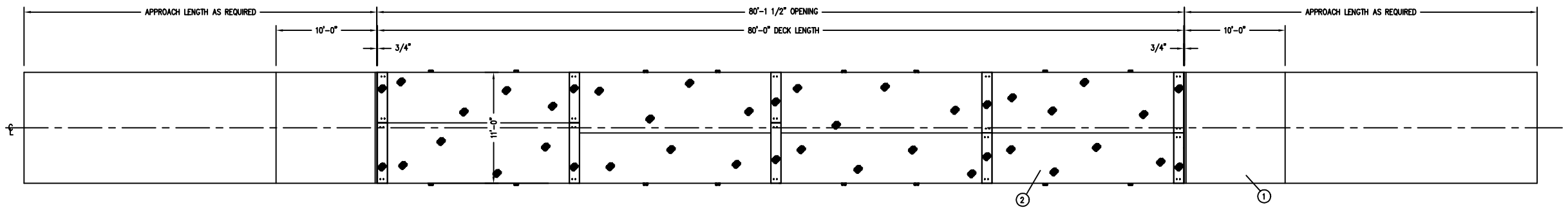

PLAN VIEW GENERAL ARRANGEMENT

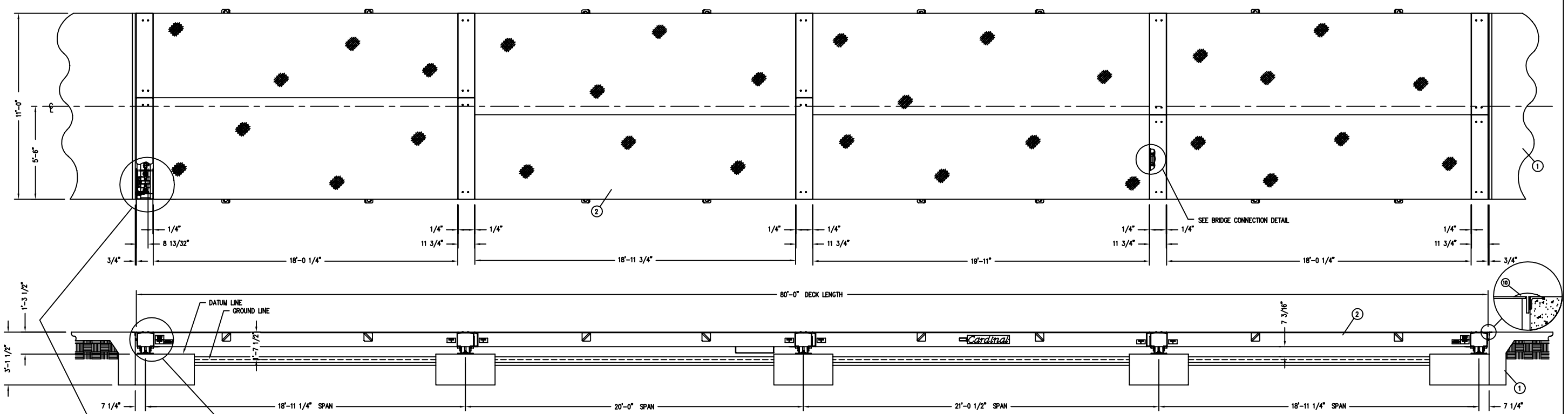

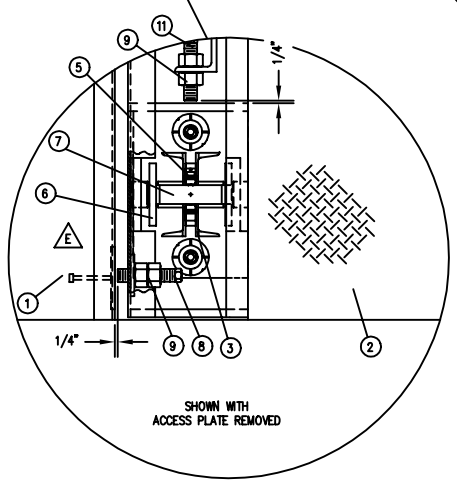

SHOWN WITH ACCESS PLATE REMOVED

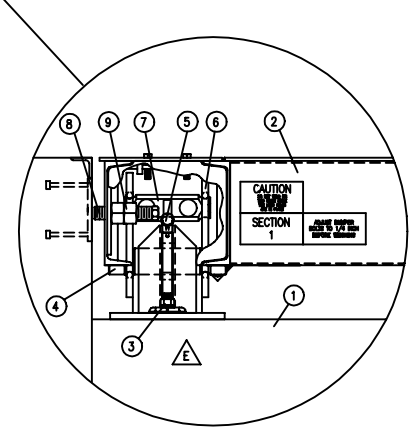

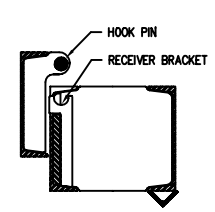

BRIDGE CONNECTION DETAIL

NOTES:

1. CAUTION: DO NOT WELD ON THE SCALE WHILE THE LOAD CELLS ARE IN PLACE.
2. REFER TO DRAWING 3502-C435-QS FOR PROPER ELECTRICAL GROUNDING SPECIFICATIONS.
3. THE WEIGHBRIDGE IS SUPPLIED IN FOUR MODULES. MAXIMUM LIFT PER MODULE IS 7,600 POUNDS.
4. PLACE MODULES ON LOAD CELL STANDS. ADJUST STAND SO THAT LINKS ARE PLUMB, LATERALLY AND TRANSVERSLY.
5. ADJUST BUMPER BOLTS TO 1/4" CLEARANCE.
6. THE WEIGHT INDICATOR IS SHOWN ON A SEPARATE DRAWING.
7. SAFETY BARRIERS ARE A USER/OWNER RESPONSIBILITY TO PREVENT VEHICLES FROM RUNNING OFF THE SIDES OF THE SCALE. FOR THE SAFETY OF VEHICLES USING THIS SCALE, SIDE RAILS AND/OR PROTECTIVE POSTS ARE AVAILABLE AS OPTIONAL EQUIPMENT.
8. THE 7 3/16" MINIMUM CLEARANCE UNDER THE SCALE MUST BE MAINTAINED THE FULL LENGTH OF THE SCALE EXCEPT AT THE LOAD CELL PIER AREAS.
9. SHIM UNDER LOAD CELL BEARING IF NECESSARY TO OBTAIN PROPER DEAD LOAD.
10. CARDINAL SCALE MFG. CO. RECOMMENDS THAT THE CUSTOMER INSTALL PROTECTIVE CONDUIT/COVER FOR THE LOAD CELL CABLES WHENEVER THE CONDITION IS PRESENT THAT CAN RESULT IN DAMAGE OR ABRASION TO THE LOAD CELL CABLES.
11. COIL EXCESS LOAD CELL CABLES AROUND LOAD CELL WIRE BRACKETS UNDER ACCESS PLATES.

MODEL 10080-EPR
NOMINAL CAPACITY 100 TONS
U.S.--CONCENTRATED LOAD CAPACITY 30 TONS
CANADA--SECTIONAL CAPACITY
CANADA--S.WA. NO.
SERIAL NUMBER "SALES ORDER NUMBER"

NOMINAL CAPACITY IS THE GROSS CAPACITY AS ASSIGNED BY THE MANUFACTURER.

CONCENTRATED LOAD CAPACITY (CLC) AS ASSIGNED BY THE MANUFACTURER, IS THE LOAD WHICH CAN BE PLACED ANYWHERE ON THE PLATFORM IN THE PRESCRIBED TEST PATTERN.

SECTIONAL CAPACITY IS THE MAXIMUM LOADING FOR EACH PAIR OF LOAD CELLS AS ADJACENT PLATFORMS (SPANS) ARE LOADED.

QTY.	QTY.	QTY. -0A	ITEM ASSY	PART/DWG. NUMBER	DESCRIPTION	MATERIAL OR SOURCE	WT. EACH
D		4	11	0129-B032-54	CHECK BOLT		2.7
		22'	10	6540-0002	RUBBER T-STRIP		0.88
		8	9	6013-0175	HEX NUT	1 1/4-7UNC-2B HEAVY	0.56
D		4	8	0129-B032-50	CHECK BOLT		2.0
		1	7	3502-D418-0A	INTERCONNECTION DIAG.		115.0
		20	6	0103-C121-0A	LINK ASSEMBLY		13.0
		10	5	2993-B036-08	PIVOT		0.7
		10	4	0103-B120-08	SUPPORT PIN		16.0
E		10	3	0103-C204-0A	LOAD CELL STAND ASSY		61.2
		1	2	0103-D150-0A	WEIGHBRIDGE SCHEMATIC		29,861
		1	1	0103-D149-0A	FOUNDATION PLAN		238.8
		31296	WT.		PARTS/MATERIAL LIST		

UNLESS OTHERWISE SPECIFIED TOLERANCE ON DIMENSIONS ARE:
ANGLES ± 1/2°
INTEGERS/FRACTIONS ± 1/16 IN.
DECIMALS (.X) ± .03 IN.
DECIMALS (.XX) ± .01 IN.
DECIMALS (.XXX) ± .005 IN.
NOTE: WHOLE NUMBERS MUST BE WRITTEN XX,000 TO INVOKE DECIMAL TOLERANCES.

THIS DRAWING IS THE PROPERTY OF THE CARDINAL SCALE MFG. CO. AND SHALL NOT BE USED NOR REPRODUCED EITHER WHOLLY OR IN PART EXCEPT WITH WRITTEN AUTHORIZATION. ALL RIGHTS OF DESIGN OR INVENTION ARE RESERVED.

Cardinal
Cardinal Scale Manufacturing Co.
WEBB CITY, MISSOURI • USA • 64870
CARDINAL DETECTO FULLER WEIGHING SYSTEMS

TITLE FINAL ASSEMBLY
(80'-0" X 11'-0"; 100 TON CAPCITY; 30 TON CLC)

SCALE 3/8" = 12"	DO NOT SCALE DRAWING	NEXT ASSEMBLY	
DR. MLS	DATE 9/30/98		
CH. MLS	DATE 10/15/98	*0103-D148-0A*	
MODEL 10080-EPR	SHEET 1 OF 1	DWG. NO. 0103-D148-0A	REV. E

Generated by Cardinal/Detecto Computer-Aided Drafting System